Manta cantilever

by Eugeni Quitllet

Introducing our latest collection of chairs suitable for both indoor and outdoor use. The Manta chair is an incredibly versatile piece that will fit effortlessly into any space, be it a home, workplace or public venue. The chair's interchangeable design includes seats and bases that can be combined in a variety of ways, offering endless possibilities to create the ideal seating solution for any environment.

Info

Description

Weight: 5.6 Kg

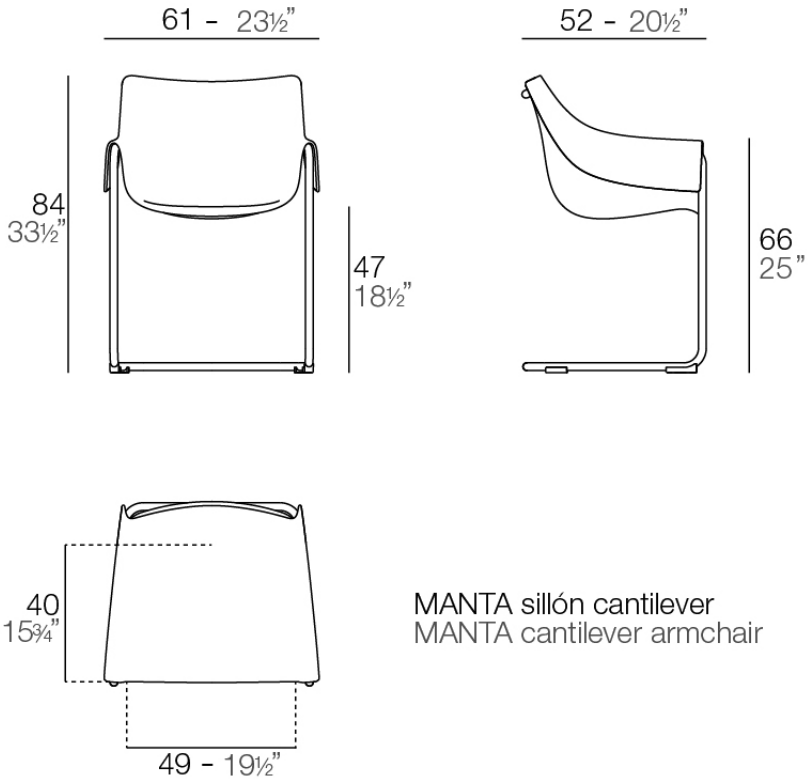

MANTA sillón cantilever
MANTA cantilever armchair

Finishes

finishes

BASIC PP
Ref. 65047

white

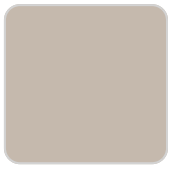
ecru

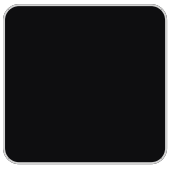
black

Available in various colors

legs

LEGS
Ref. 65047E

white 201

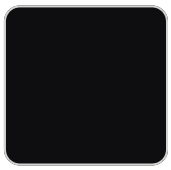
black 2002

VONDOM

Ambients