Fiesta bar 120cm

by Archirivolto Design

FIESTA, a designer bar counter by **Archirivolto** for **VONDOM**: “design is beauty, harmony and freedom and cannot therefore be bound by strict, pre-established rules, nor can it only be seen as the privilege of social or cultural elite”.

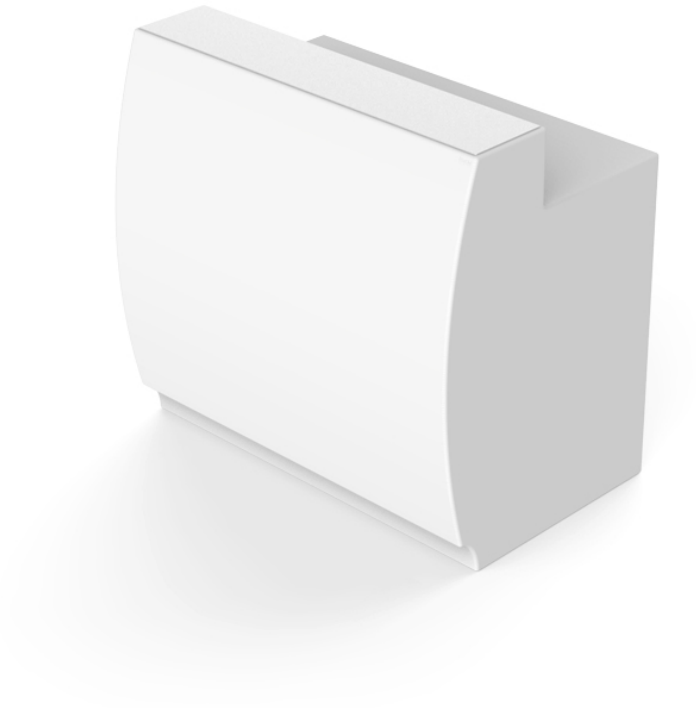

VONDOM

Info

Description

Made of polyethylene resin by rotational moulding.100% Recyclable. Item suitable for indoor and outdoor use. Available in different finishes.

Weight: 80.61 Kg

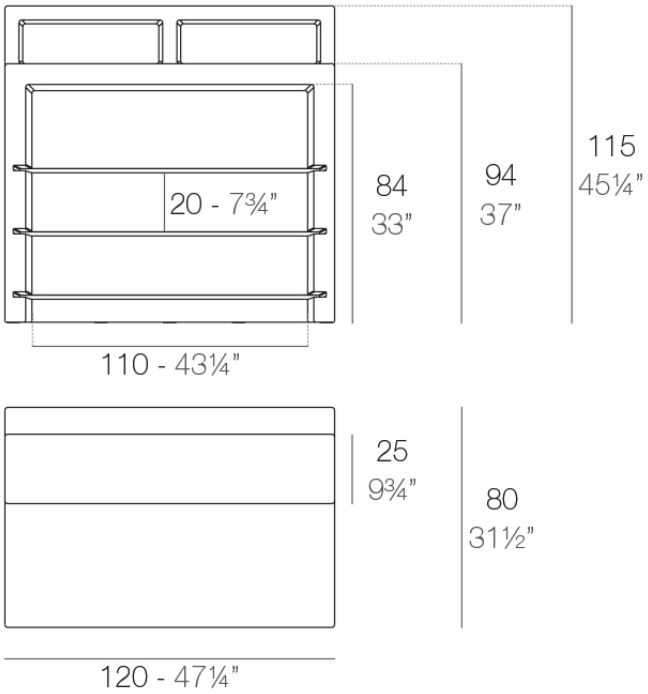

FIESTA 120 Barra
FIESTA 120 Counter

Combinations

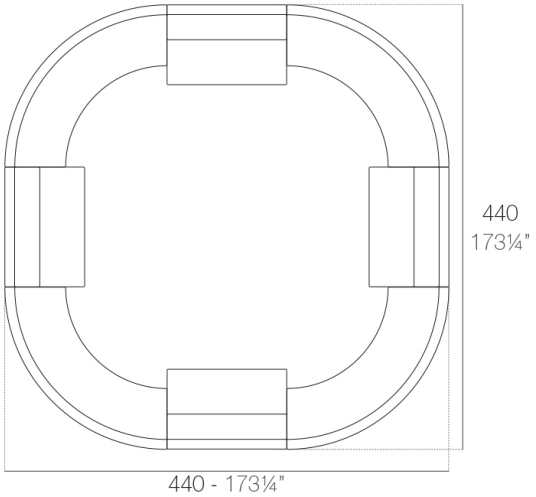

4 x 56023 120 Barra - 120 Counter
4 x 56002 Barra curva - Curved counter

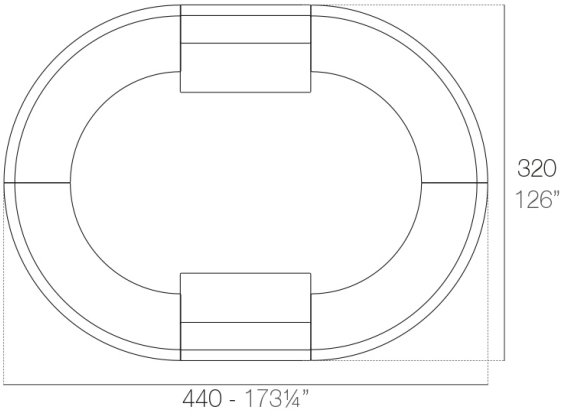

2 x 56023 120 Barra - 120 Counter
4 x 56002 Barra curva - Curved counter

Accessories

- **BLUETOOTH**
  Link your smartphone or tablet to the sound system via Bluetooth.
- **TOP**
  HPL Solid Core Top
- **SHELVES**
- **WHEELS**
  Includes castors for easy move

VONDOM

Finishes

finishes

BASIC
Ref. 56023

Matt Polyethylene

LACQUERED
Ref. 56023F

VONDOM

Lacquered Polyethylene

lighting

WHITE LED
Ref. 56023W

White internally lit unit with LED technology. Available only in matte ice white finish.

RGBW LED
Ref. 56023L

ice 2101

Unit with internal lighting with RGBW LED technology and remote control unit for switching colors. Available only in matte ice white finish. Remote control included.

RGBW LED DMX
Ref. 56023D

ice 2101

Unit with internal lighting with RGBW LED technology and remote control unit for switching colors. Also controlLED by DMX-1024 (wireless), enabling communication between one or more products simultaneously via the DMX transmitter (not included). There are two options to choose from: Professional XLR DMX and Home WIFI DMX. (Remote control included).
Optional battery

RGBW LED BATTERY
Ref. 56023Y

ice 2101

Unit with internal lighting with battery-powered RGBW LED technology. Includes charger and remote control for switching colors and charger. Available only in matte ice white finish.
RGBW LED DMX BATTERY

Ref. 56023DY

ice 2101

Unit with internal lighting with RGBW LED technology and remote control unit for switching colors. Also controlLED by DMX-1024 (wireless), enabling communication between one or more products simultaneously via the DMX transmitter (not included). There are two options to choose from: Professional XLR DMX and Home WIFI DMX. (Remote control included).

VONDOM

Ambients